Safety Application Note ISO 13849

FESTO

Safety Subfunctions Pneumatics

STO – Safe Torque Off
Up to Category 2, up to PL d

PUS – Prevention Unexpected Startup
Up to Category 2, up to PL d

Circuit

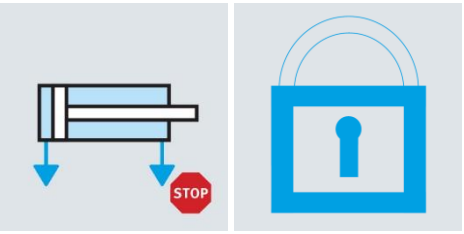

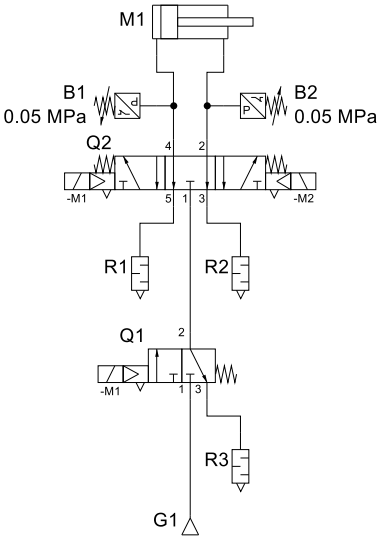

Our effort – your advantage

Our effort for the preparation of these documents
and your saved time 7 h
Free of charge for you.

100383

Title ..... Safety Subfunctions Pneumatics - Circuit
Version 1.30
Document number 100383
Original ..... German
Author ..... Festo
Date 10.11.2026

Legal Notice

In the following, the “Festo SE & Co. KG” is designated as “Festo”.
This document is not binding. This document outlines a possible solution for a sample application and makes no claim of completeness, especially with regard to configuration and equipment, as well as any eventualities for your actual application. This document is not a customised solution, it merely offers assistance with typical task assignments.
The values stated in this document are partly assumptions and assessments which do not replace a detailed examination based on ISO 13849, IEC 61508, IEC 62061 and/or IEC 61511.
The actual characteristic values that can be obtained (especially PL, PFH_D, category, DC, $MTTF_D$, CCF, SIL, HFT, PFH, PFD) depend on the components used, as well as their conditions of use in the actual application.
This document does not relieve you of the obligation to carry out a risk assessment and validation for your specific application and to ensure compliance with all requirements yourself, in particular the Machinery Directive 2006/42/EC (to be applied until 20 Jan. 2027) or the Machinery Regulation (EU) 2023/1230 (to be applied from 20 Jan. 2027). As the user, you are solely responsible for your specific use case and for the proper operation of the products described in this context.
Festo does not accept any liability for damages arising from the use of any incorrect or incomplete information contained in this documentation or any information missing therefrom. This equally applies to defects resulting from improper handling of devices and modules. In addition, all liability, with the exception of intent or gross negligence on the part of Festo, for damages arising due to non-adherence of the specifications of the EC Machinery Directive 2006/42/EC (to be applied until 20 Jan. 2027) or the Machinery Regulation (EU) 2023/1230 (to be applied from 20 Jan. 2027) is also rejected.
The information in this document is in no way intended as a substitute for the operating instructions of the respective manufacturers or the design and testing of the application by the user. The operating instructions for products from Festo can be found at www.festo.com. Users of this document must themselves verify that all the functions described herein also work correctly in the application. Even after examining this document and using the specifications contained herein, users are nevertheless solely responsible for their own application.
Otherwise, all stipulations concerning liability included in the terms and conditions of delivery, payment and use of software from Festo, which can be found at www.festo.com and can be supplied on request, apply.
This document is only suitable for persons with sufficient expertise for machine safety based on ISO 12100, ISO 13849, IEC 61508, IEC 62061 and IEC 61511. In addition, the following qualifications are required in the project team:

- Specialist in pneumatics
- Specialist in electrical engineering
- Specialist for the programming of control systems and safety switching devices

Copyright Notice

This documentation is the intellectual property of Festo, which also holds the exclusive copyright. Any modification of the content, duplication or reprinting of this documentation, as well as distribution to third parties, is only permissible with the express consent of Festo.
Festo reserves the right to make modifications to this document in whole or in part. All brand and product names are trademarks or registered trademarks of their respective owners.

© Festo SE & Co. KG, D - 73734 Esslingen, 2023, 2024, 2026
Internet: https://www.festo.com

Table of Contents

1 General 4

1.1 Objectives of this Document 4

1.2 General Notes 4

1.3 Notes on safety-related features of the partial circuit 4

2 Circuit 5

3 Suitable Products for Pressure Switches B1, B2 6

4 Suitable Products for Valve Q1 7

4.1 Standard Valves 7

4.2 On-Off Valves 8

4.3 Soft-Start/Quick Exhaust Valve in Service Unit 9

5 Suitable Products for Valve Q2 10

6 Used Literature 11

6.1 Cited Documents from Festo 11

6.2 Standards 11

6.3 Legal Regulations 11

7 Information about the Document 12

7.1 General Information 12

7.2 Revision History 12

7.3 Approval/Release of the Document 12

7.4 Period of Validity 12

1 General

1.1 Objectives of this Document

- This document shows a possible example circuit for the safety subfunctions STO (up to category 2, up to PL d) and PUS (up to category 2, up to PL d).
- For the implementation of the safety subfunction relevant components, the most important features are listed.
- Based on these features, suitable products from Festo are recommended.

1.2 General Notes

- The given circuit is a principle circuit which cannot be complete due to clarity and scope. It is a recommendation that does not exclude other possibilities.
- The abbreviations used for the safety subfunctions are based on the definitions in VDMA 24584 for pneumatics. The definitions used and important notes are given in the document ↗ 100380 Safety subfunctions pneumatics – STO, PUS.
- The requirements for the valve are only considered in the context of the pneumatic circuit. Suggestions for the electrical wiring of individual valves or valve terminals have not been considered in this document.
    - For single valves, the document ↗ 100393 Safe electrical switch-off of individually controlled valves should be considered.
    - For valve terminals, the document ↗ 100394 Safe electrical switch-off of valve terminals should be considered.
- In the product list included here with recommendations for suitable products, we have checked the specified requirements for the pneumatic circuit. However, if further information is available to us, e.g. through our product observation, this data can be changed on a daily basis. Therefore, these data must be checked in the data sheets available online before final use to see if there has been any change.
- Whether a recommended product is suitable for a particular application must be checked by the user and confirmed in his technical documentation.
- For the Sistema project file of this circuit, the document ↗ 100395 Notes on Sistema project files must be taken into account.

1.3 Notes on safety-related features of the partial circuit

- For safety subfunctions with 1-channel architecture and testing of the safety circuit (here category 2), a single fault between the tests can lead to the loss of the safety subfunction. The loss of the safety subfunction is detected by the test.
- The safe condition that can be achieved with the test channel in category 2 is the “interruption of the compressed air supply”. It must be assessed on an application-specific basis whether this is a safe condition.
- The consideration of measures for failures due to common cause (CCF) are to be evaluated depending on the application. Recommendations on possible measures are contained in the document ↗ 100399 Recommendations for the implementation of measures against common cause failures (CCF).
- The calculation of the $MTTF_D$ characteristic from the B_{10} values are included in the Sistema project file. The B_{10} value must be adjusted according to the valves used.
- In order to estimate a diagnostic coverage for valve Q2, a suitable plausibility and switching time monitoring of the control signals up to the signal change of sensors B1, B2 should be implemented. This ensures that a test is carried out each time the control of valve Q2 is changed.

2 Circuit

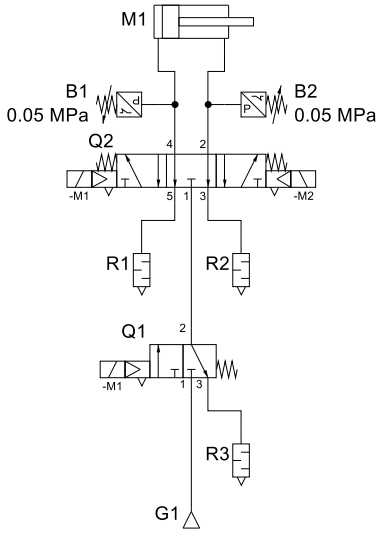

Parts list

Pos....	Identifi...	Description
1	B1	Pressure switch
2	B2	Pressure switch
3	G1	Operation pressure
4	M1	Double-acting drive
5	Q1	3/2-way valve
6	Q2	5/3-way valve
7	R1	Silencer
8	R2	Silencer
9	R3	Silencer

Safety subfunction

STO - safe torque off	up to category 2, up to PL d can be reached
PUS - Prevention unexpected start-up	up to category 2, up to PL d can be reached

Block diagram

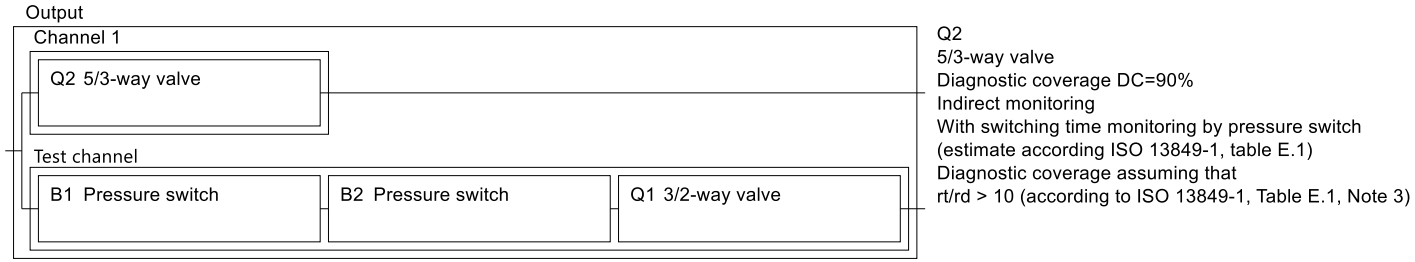

Important note

The safe state of the test channel is "interruption of the compressed air supply"

3 Suitable Products for Pressure Switches B1, B2

- Based on the following features, other suitable pressure switches from Festo can also be selected using the features in the data sheets available online.
- Depending on the application, it must be evaluated whether this list of features needs to be added.

Feature	Value
Product category	Pressure switch
Measured variable	Relative pressure
Switching element function	NC contact OR Changeover
Operating pressure	0 – 8 bar OR 1 – 10 bar OR 1 – 12 bar OR -1 – 10 bar
Service-live value B_{10}	Specified
Relevant basic safety principles	Yes
Relevant well-tried safety principles	Yes

Other values for the features may be possible and must be considered separately.

Note: These pressure switches were selected as examples from different series and sizes.

No.	Material	Designation/Type (Sorting ↑)	Link Data Sheet	Link Data Sheet Product Reliability
1.	10773	Pressure switch PEV-1/4-B	↗	↗
2.	8000210	Pressure switch SPBA-P2R-G18-2P-M12-0,25X	↗	↗

4 Suitable Products for Valve Q1

4.1 Standard Valves

- Based on the following features, other suitable valves from Festo can also be selected using the features in the data sheets available online.
- Depending on the application, it must be evaluated whether this list of features needs to be added.
- Additional information on these features can be found in the document ↗ 100396 Notes on features of directional control valves.

Feature	Value
Product category	Electrically actuated valves
Valve function	3/2-way, closed, monostable
Type of actuation	Electric
Type of piloting	Pilot actuated
Pilot air supply	Internal or external
Type of reset	Mechanical spring
Duty cycle	100 % OR 100 % with holding current reduction
Service-live value B_{10}	Specified
Relevant basic safety principles	Yes
Relevant well-tried safety principles	Yes

Other values for the features may be possible and must be considered separately.

Note: These valves were selected as examples from different series and sizes.

No.	Material		Designation/Type (Sorting ↑)	Link Data Sheet	Link Data Sheet Product Reliability
	Single valves				
1.	574348		Solenoid valve VUVG-L10-T32C-MT-M5-1P3	↗	↗
2.	574352		Solenoid valve VUVG-L10-T32C-MZT-M5-1P3	↗	↗
3.	575274	✶	Solenoid valve VUVS-L20-M32C-MD-G18-F7-1C1	↗	↗
4.	575273	✶	Solenoid valve VUVS-L20-M32C-MZD-G18-F7-1C1	↗	↗

✶ Core product range

4.2 On-Off Valves

- Based on the following features, other suitable valves from Festo can also be selected using the features in the data sheets available online.
- Depending on the application, it must be evaluated whether this list of features needs to be added.
- Additional information on these features can be found in the document ↗ 100396 Notes on features of directional control valves.

Feature	Value
Product category	On-off Valves
Valve function	3/2-way, closed, monostable
Type of actuation	Electric
Type of piloting	Pilot actuated
Type of reset	Mechanical spring
Duty cycle	100 %
Service-live value B_{10}	Specified
Relevant basic safety principles	Yes
Relevant well-tried safety principles	Yes

Other values for the features may be possible and must be considered separately.

Note: These on-off valves were selected as examples from different series and sizes.

No.	Material	✶	Designation/Type (Sorting ↑)	Link Data Sheet	Link Data Sheet Product Reliability
1.	542602	✶	On-off valve MS6-EE-1/2-10V24-S	↗	↗

✶ Core product range

4.3 Soft-Start/Quick Exhaust Valve in Service Unit

- Based on the following features, other suitable soft-start/quick exhaust valves from Festo can also be selected using the features in the data sheets available online.
- Depending on the application, it must be evaluated whether this list of features needs to be added.
- Additional information on these features can be found in the document ↗ 100396 Notes on features of directional control valves.

Feature	Value
Product category	Soft-Start/Quick Exhaust Valve
Valve function	3/2-way, closed, monostable, soft-start function
Type of actuation	Electric
Type of piloting	Pilot actuated
Type of reset	Mechanical spring
Duty cycle	100 %
Service-live value B_{10}	Specified
Performance Level (PL)	PL c

Other values for the features may be possible and must be considered separately.

Note: These soft-start and quick exhaust valves were selected as examples from different series and sizes.

No.	Material	Designation/Type (Sorting ↑)	Link Data Sheet	Link Data Sheet Product Reliability
1.	8001469	Soft-start/quick exhaust valve MS6-SV-1/2-C-10V24-S	↗	↗
2.	570737	Soft-start/quick exhaust valve MS9-SV-G-C-V24-S-VS	↗	↗

Note

- Soft-start and quick exhaust valves with category 3, PL d and category 4, PL e can also be used in the service unit if this is required in the application.

5 Suitable Products for Valve Q2

- Based on the following features, suitable valves from Festo can be selected using the features in the data sheets available online.
- Depending on the application, it must be evaluated whether this list of features needs to be extended.
- Additional information on these features can be found in the document ↗ 100396 Notes on features of directional control valves.

Feature	Value
Product category	Electrically actuated valves
Valve function	5/3 exhausted
Type of actuation	Electric
Type of piloting	Pilot actuated
Pilot air supply	External
Type of reset	Mechanical spring
Duty cycle	100 % OR 100 % with holding current reduction
Service-live value B_{10}	Specified
Relevant basic safety principles	Yes
Relevant well-tried safety principles	Yes

Other values for the features may be possible and must be considered separately.

Note: These valves were selected as examples from different series and sizes.

No.	Material	✶	Designation/Type (Sorting ↑)	Code[1]	Link Data Sheet	Link Data Sheet Product Reliability
	Single valves					
1.	547084		Solenoid valve VSVA-B-P53E-ZH-A1-1C1		↗	↗
2.	566469		Solenoid valve VUVG-L10-P53E-ZT-M5-1P3		↗	↗
3.	575692	✶	Solenoid valve VUVS-L20-P53E-MZD-G18-F7-1C1		↗	↗
	Valve for valve terminals					
4.	533346		Solenoid valve VMPA1-M1H-E-PI	E	↗	↗
5.	573420		Solenoid valve VUVG-B10-P53E-ZT-F-1T1L	E	↗	↗
6.	8033047		Solenoid valve VSVA-B-P53E-ZH-A1-1T1L	E	↗	↗

✶ Core product range

[1] Code of the valve for the configurator or in the order code of the valve terminal.

6 Used Literature

6.1 Cited Documents from Festo

[1] 100380 Safety subfunctions pneumatics – STO
[2] 100393 Safe electrical switch-off of individually controlled valves
[3] 100394 Safe electrical switch-off of valve terminals
[4] 100395 Notes on Sistema project files
[5] 100396 Notes on features of directional control valves
[6] 100399 Recommendations for the implementation of measures against common cause failures (CCF)

6.2 Standards

[7] DIN EN ISO 4414:2011-04 – Pneumatic fluid power - General rules and safety requirements for systems and their components (ISO 4414:2010); German version EN ISO 4414:2010
[8] ISO 5598:2020-01 – Fluid power systems and components - Vocabulary
[9] VDMA 24584:2022-06 – Safety functions of regulated and unregulated (fluid) mechanical systems; German Version
[10] DIN EN ISO 12100:2011-03 - Safety of machinery - General principles for design - Risk assessment and risk reduction (ISO 12100:2010); German version EN ISO 12100:2010
[11] DIN EN ISO 13849-1:2023-12 – Safety of machinery - Safety-related parts of control systems - Part 1: General principles for design (ISO 13849-1:2023); German version EN ISO 13849-1:2023
[12] DIN EN ISO 13849-2:2013-02 – Safety of machinery - Safety-related parts of control systems - Part 2: Validation (ISO 13849-2:2012); German version EN ISO 13849-2:2012
[13] ISO 19973-1:2015-08 - Pneumatic fluid power - Assessment of component reliability by testing - Part 1: General procedures
[14] DIN EN 61508:2011-02 - Functional safety of electrical/electronic/programmable electronic safety-related systems (IEC 61508:2010); German version EN 61508:2010
[15] DIN EN 61508-4:2011-02 - Functional safety of electrical/electronic/programmable electronic safety-related systems - Part 4: Definitions and abbreviations (IEC 61508-4:2010); German version EN 61508-4:2010
[16] DIN EN 61511:2019-02 - Functional safety - Safety instrumented systems for the process industry sector - (IEC 61511:2016); German version EN 61511:2017
[17] DIN EN IEC 62061:2023-02 - Safety of machinery - Functional safety of safety-related control systems (IEC 62061:2021); German version EN IEC 62061:2021

6.3 Legal Regulations

[18] Machinery Directive: Directive 2006/42/EC of the European Parliament and of the Council of 17 May 2006 on machinery, and amending Directive 95/16/EC (recast)
[19] Machinery Regulation: Regulation (EU) 2023/1230 of the European Parliament and of the Council of 14 June 2023 on machinery and repealing Directive 2006/42/EC of the European Parliament and of the Council and Council Directive 73/361/EEC

7 Information about the Document

7.1 General Information

Document Number	100383	100383
Safety Subfunction	STO	STO
Category	Up to Category 2 reachable	Up to Category 2 reachable
PL	Up to PL d reachable	Up to PL d reachable

7.2 Revision History

Ver.	Date	Ed.	Chapter	Description of Change/Impact
1.10	17.08.2022	JKHL	All	Creation of document
1.20	04.11.2024	JKHL	1.1, 1.3, 2	Safe state “interruption of compressed air supply” added and STO changed to up to category 2, up to PL d. According to the standard is only one safe state required.
			3, 4, 5	Product lists updated
			6	List updated
			Last page	Contacts added
1.30	10.11.2026	JKHL	All	Layout updated, editorial review
			3	Safety principles added
			6	Machinery regulation added

7.3 Approval/Release of the Document

Role	Signature
Release	Jürgen Kühnle Digital signiert von Jürgen Kühnle DN: cn=Jürgen Kühnle gn=Jürgen Kühnle c=DE Germany l=DE Germany o=Festo SE & Co. KG ou=SC-OTP e=juergen.kuehnle@festo.com Grund: Freigabe dieses Dokuments Ort: Esslingen Datum: 2026-11-10 14:21+01:00

7.4 Period of Validity

Document is valid until 2031-11-10 or until one of the documents used or the required relevant base are changed.



Do you have any questions about this Application Note?

You are welcome to send us your questions via the contact form.



Are you looking for Safety Application Notes with solution examples for the most important safety sub-functions in pneumatics?

We regularly expand our collection of documents in the Support Portal.



Do you want to get a general overview of machine and system safety?

We have compiled information on machine and functional safety in our guide.

Download the guide.



Do you need further support?

We also offer services for machine safety

- Risk assessment
- Safety concept
- Circuit design
- Verification / validation

You can request a quotation via the contact form.



Do you need training or further education?

At Festo Didactic you will find training courses on machine safety, functional safety and CE marking.

Request a quote for training or workshop.